F4

ELECTRIC PALLET TRUCK 1.5T

1500 kg | 105 mm | 24 V Li-Ion

The F4 is ideal for a wide range of environments, from light retail usage to intensive logistics operations. Its compact size (400 mm fork face length) and reduced service weight make it highly maneuverable in tight spaces, while its dual-battery slot design ensures continuous operation for long shifts. The optional stabilizing wheels enhance safety when handling large or heavy loads, making the F4 a dependable solution for warehouses, retail stores, and transport hubs.

SPECIFICATION	REF	UNIT	VALUE
Battery type			Li-Ion
Battery nominal capacity		Ah	20
Battery voltage		V	24
Load capacity	Q	kg	1500
Load centre distance	c	mm	600
Service weight		kg	120
Lift height	h_3	mm	105
Overall length		mm	1550
Overall width	b_1/b_2	mm	590 (695)
Length to face of forks	l2	mm	400
Fork dimensions	s/e/l	mm	55/150/1150
Turning radius		Wa	1360
Operator type			Pedestrian
Load distance, centre of drive axle to fork		mm	950
Wheelbase		mm	1180
Axle loading, laden front/rear		kg	480/1140

Copyright 2026 EP Equipment. All rights reserved. | Datasheet last updated 2025-11-26

Features

Flexible battery system

The F4 supports up to two removable 24V/20Ah Li-ion batteries, providing extended runtime for intensive applications or opportunity charging flexibility.

Battery option

Compact & lightweight

With a short 400 mm fork face length and a low service weight of only 120 kg, the F4 is highly maneuverable in narrow aisles and confined spaces.

Optional stabilizing wheels

To safely handle heavier or uneven loads, the F4 can be equipped with stabilizing wheels, available from the factory or as retrofit.

Stablizing wheel option

Customisable forks

Available in various lengths and widths, the F4 adapts to different pallet standards and customer-specific applications.

VDI Chart

	SPECIFICATION	REF	UNIT	VALUE
1.4	Operator type			Pedestrian

Copyright 2026 EP Equipment. All rights reserved. | Datasheet last updated 2025-11-26

	SPECIFICATION	REF	UNIT	VALUE
1.5	Load capacity	Q	kg	1500
1.6	Load centre distance	c	mm	600
1.8	Load distance, centre of drive axle to fork		mm	950
1.9	Wheelbase		mm	1180
2.1	Service weight		kg	120
2.2	Axle loading, laden front/rear		kg	480/1140
2.3	Axle loading, unladen front/rear		kg	90/30
3.1	Tyre type			Polyurethane
3.2	Tyre size, front		mm	210x70 mm
3.3	Tyre size, rear		mm	80x60 mm
3.5	Wheels, number front/rear (x=drive wheels)			1x —/4
3.7.1	Tread width, rear	b_{11}	mm	410 (535)
4.0	Max lift height	H	mm	105
4.19	Overall length		mm	1550
4.20	Length to face of forks	l2	mm	400
4.21	Overall width	b_1/b_2	mm	590 (695)
4.22	Fork dimensions	s/e/l	mm	55/150/1150
4.32	Ground clearance, centre of wheelbase		mm	25
4.34.1	Aisle width for pallets 1000×1200 crossways		Ast	2160
4.34.2	Aisle width for pallets 800×1200 lengthways		Ast	2025
4.35	Turning radius		Wa	1360
4.4	Lift height	h_3	mm	105
5.1	Travel speed, laden/unladen		km/h	4/4.5
5.10	Service brake			Electromagnetic
5.2	Lifting speed, laden/unladen		m/s	0.017/0.020
5.3	Lowering speed, laden/unladen		m/s	0.058/0.046
5.8	Max. gradeability, laden/unladen		%	6/16
6.1	Drive motor rating S2 60 min		kW	0.75
6.2	Lift motor rating at S3 15%		kW	0.5
6.4	Battery nominal capacity		Ah	20
6.4	Battery voltage		V	24
6.4.1	Battery type			Li-Ion
6.5	Battery weight		kg	5
10.5	Steering design			Mechanical
10.7	Sound pressure level at the drivers ear		dB(A)	74

Copyright 2026 EP Equipment. All rights reserved. | Datasheet last updated 2025-11-26

VDI Drawing

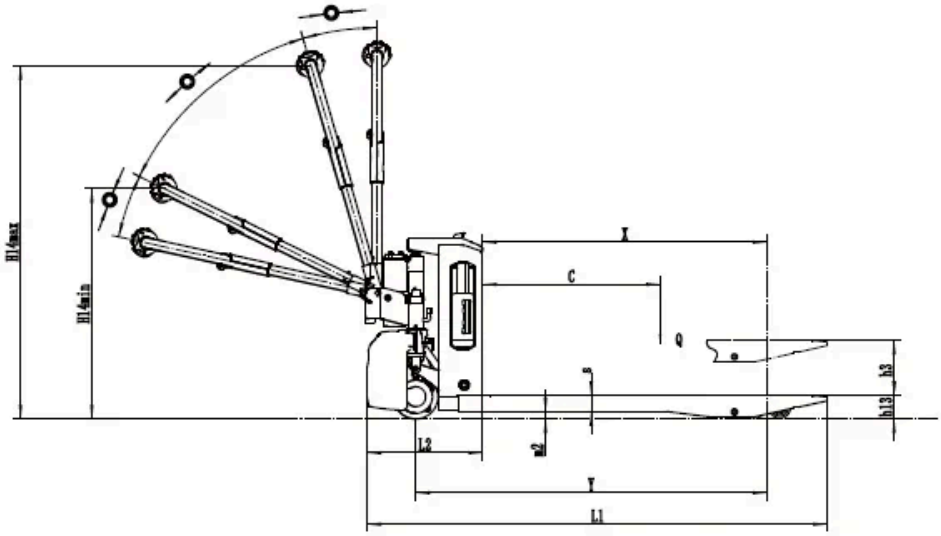

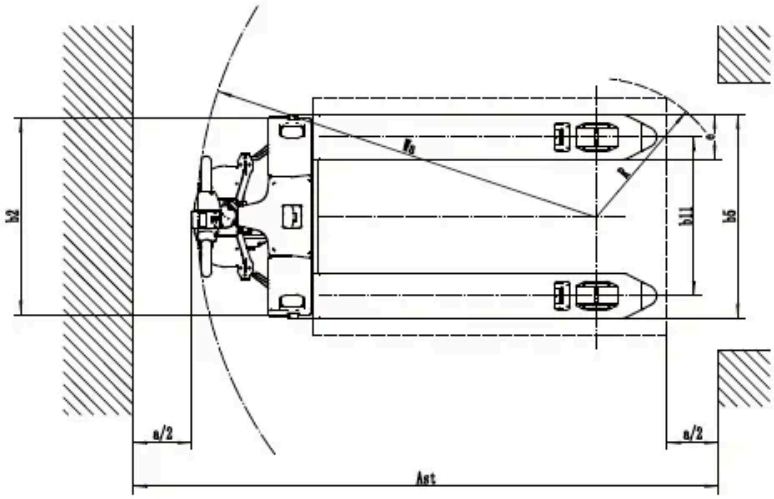

Options

ITEM	OPTIONS (optional items marked in yellow)
Fork dimension	1150×560 | 800×560 | 900×560 | 1000×560 | 1220×560 | 1350×560 | 1500×560 | 800×685 | 900×685 | 1000×685 | 1150×685 | 1220×685 | 1350×685 | 1500×685
Fork lowered height	80
Load wheel type	PU
Handle head type	Hands small handle head | ET Hands big handle head
Load wheel material	PU
Drive wheel material	PU

Copyright 2026 EP Equipment. All rights reserved. | Datasheet last updated 2025-11-26

ITEM	OPTIONS (optional items marked in yellow)
Battery capacity	20AHx1 | 20AHx2 | 20AHx3 | 20AHx4
Charger	24V-5A external | 24V-10A external | 24V-4A external DC-DC
Battery display indicator (BDI)	without time
Buzzer	Yes and not customised
Turtle speed	Yes and not customized
Castor wheels	No | Yes and not customize
Drive assembly	Yes and not customized

Copyright 2026 EP Equipment. All rights reserved. | Datasheet last updated 2025-11-26