F4-201

ELECTRIC PALLET TRUCK 2.0T

2000 kg | 105 mm | 48 V Li-Ion

The F4 201 is ideal for operations requiring both strength and maneuverability. Its 2.0-ton load capacity and optional stabilizing wheels make it reliable for handling large or uneven loads. The compact size and reduced weight ensure excellent agility in narrow aisles and confined spaces, while the removable Li-ion batteries support opportunity charging for full-shift availability. Its newly designed square-tube tiller head improves both ergonomics and durability, ensuring smooth operation throughout the workday.

SPECIFICATION	REF	UNIT	VALUE
Battery type			Li-Ion
Battery nominal capacity		Ah	20
Battery voltage		V	48
Load capacity	Q	kg	2000
Load centre distance	c	mm	600
Service weight		kg	140
Lift height	h_3	mm	105
Overall length		mm	1550
Overall width	b_1/b_2	mm	590 / 695
Length to face of forks	l2	mm	400
Fork dimensions	s/e/l	mm	50x150x1150
Turning radius		Wa	1360
Operator type			Pedestrian
Load distance, centre of drive axle to fork		mm	950
Wheelbase		mm	1180
Axle loading, laden front/rear		kg	620/1520

Copyright 2026 EP Equipment. All rights reserved. | Datasheet last updated 2025-11-26

Features

48V power system

The F4 201's 48V system boosts reliability and efficiency, allowing operators to move more goods with less effort.

Removable Li-ion batteries

Equipped with two 24V/20Ah plug-in batteries, the F4 201 offers flexible charging, fast replacement, and zero maintenance.

Ergonomic tiller design

The newly designed square-tube tiller provides strength, comfort, and smooth operation for daily industrial use.

Optional stabilizing wheels

Stabilizing wheels enhance safety and load stability, reducing risks when handling heavy or uneven loads.

Copyright 2026 EP Equipment. All rights reserved. | Datasheet last updated 2025-11-26

VDI Chart

	SPECIFICATION	REF	UNIT	VALUE
1.4	Operator type			Pedestrian
1.5	Load capacity	Q	kg	2000
1.6	Load centre distance	c	mm	600
1.8	Load distance, centre of drive axle to fork		mm	950
1.9	Wheelbase		mm	1180
2.1	Service weight		kg	140
2.2	Axle loading, laden front/rear		kg	620/1520
2.3	Axle loading, unladen front/rear		kg	100/40
3.1	Tyre type			Polyurethane
3.2	Tyre size, front		mm	210x70
3.3	Tyre size, rear		mm	80x60
3.4	Additional wheels (castor wheels)		mm	74x30
3.5	Wheels, number front/rear (x=drive wheels)			1x –/4
3.6.1	Tread width, front	b_{10}	mm	-
3.7.1	Tread width, rear	b_{11}	mm	410 (535)
4.0	Max lift height	H	mm	105
4.19	Overall length		mm	1550
4.20	Length to face of forks	l2	mm	400
4.21	Overall width	b_1/b_2	mm	590 / 695
4.22	Fork dimensions	s/e/l	mm	50x150x1150
4.24	Fork carriage width		mm	560 (685)
4.32	Ground clearance, centre of wheelbase		mm	30
4.34.1	Aisle width for pallets 1000×1200 crossways		Ast	2160
4.34.2	Aisle width for pallets 800×1200 lengthways		Ast	2025
4.35	Turning radius		Wa	1360
4.4	Lift height	h_3	mm	105
5.1	Travel speed, laden/unladen		km/h	4.5 / 5
5.10	Service brake			Electromagnetic
5.2	Lifting speed, laden/unladen		m/s	0.016 / 0.020
5.3	Lowering speed, laden/unladen		m/s	0.058 / 0.046
5.8	Max. gradeability, laden/unladen		%	8 / 16
6.1	Drive motor rating S2 60 min		kW	0.9

Copyright 2026 EP Equipment. All rights reserved. | Datasheet last updated 2025-11-26

	SPECIFICATION	REF	UNIT	VALUE
6.2	Lift motor rating at S3 15%		kW	0.7
6.4	Battery nominal capacity		Ah	20
6.4	Battery voltage		V	48
6.4.1	Battery type			Li-Ion
6.5	Battery weight		kg	10
6.6	Energy consumption according to DIN EN 16796		kWh/h	0.18
8.1	Type of drive control			BLDC
10.5	Steering design			Mechanical
10.7	Sound pressure level at the drivers ear		dB(A)	74

VDI Drawing

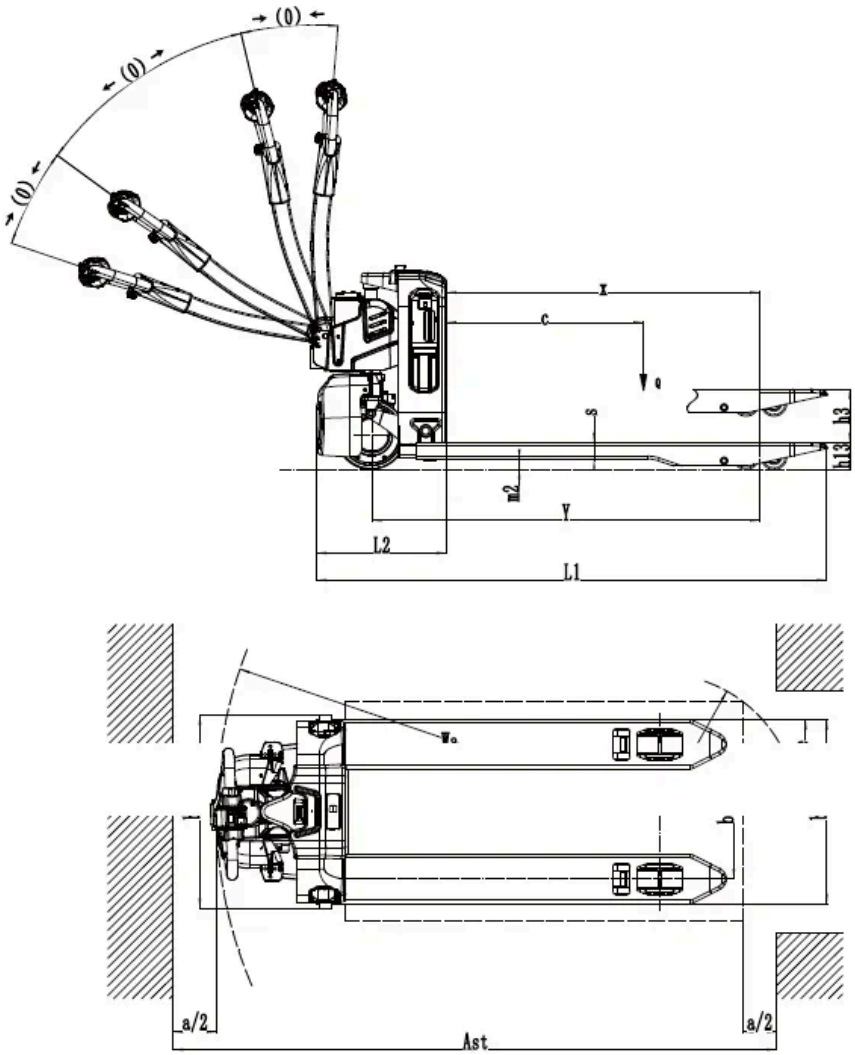

Copyright 2026 EP Equipment. All rights reserved. | Datasheet last updated 2025-11-26

Options

ITEM	OPTIONS (optional items marked in yellow)
Fork dimension	1150×560 | 900×560 | 1000×560 | 1220×560 | 1350×560 | 1500×560 | 900×685 | 1000×685 | 1150×685 | 1220×685 | 1350×685 | 1500×685
Fork lowered height	80
Load wheel type	Double | Single
Handle head type	Square-tube tiller head
Load wheel material	PU
Drive wheel material	PU
Battery capacity	24V/20Ah ×2 | 24V/20Ah ×4
Charger	24V-5A external charger ×2 | 24V-10A external charger ×2
Battery display indicator (BDI)	Without time
Buzzer	Yes and not customized
Turtle speed	Yes and not customized
Castor wheels	No | Yes and not customized

Copyright 2026 EP Equipment. All rights reserved. | Datasheet last updated 2025-11-26